PRODUCT SPECIFICATION

Series	HOOP LIGHT SERIES	Model	HOOP

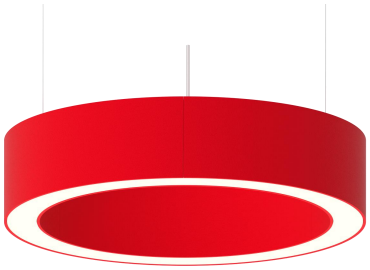

Project:

Type:

Notes:

Overview

ACOUSTIC HOOP LIGHT is a versatile architectural lighting solution, pendant mount, with direct illumination. From 2ft dia to 16.5ft dia, the Ring DRUM LIGHT stands out among the rest for range of features and options. direct suspension. Standard fixture width is 4.8"/120mm, can customize 4"/100mm and 5.5"/140mm.
The diameter is bigger than 5ft, delivery sections and with joiner. The standard safe cable lenght is 5ft(1.5m), can be customized.

Certificate

Features

1. The diameter size to choose from ranging from 2ft to 16.5ft.
2. Standard fixture width is 4.8"/120mm, can customize 4"/100mm and 5.5"/140mm.
3. 3 color finishes(black, white,silver), can be customized.
4. Operation Voltage: AC120-277V, 0-10v dimming and non-dimmable for optional
5. Aluminum body construction
6. 36 acoustic felt colors
7. Efficiency: ≧85lm/w

Type | **Suspended - Down**

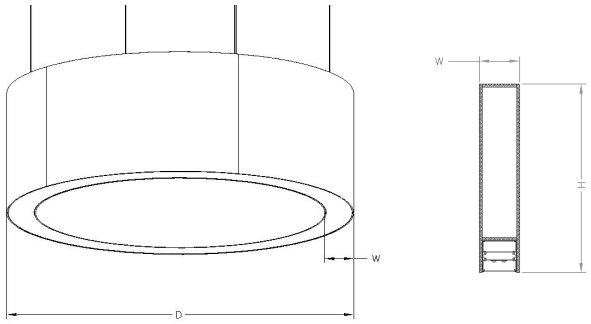

Standard Height = 110mm (4.3")

Size

Model No.	Dimension		Driver quantity	Section quantity	Dimension code	Direct Lumen/Watt
	D	W				
HOOP-40W-PRO-DM	24.4"(620mm)	4.8" (120mm)	1	1	D24	3400/40W
HOOP-50W-PRO-DM	36.2"(920mm)	4.8" (120mm)	1	1	D35	4250/50W
HOOP-80W-PRO-DM	48.0"(1220mm)	4.8" (120mm)	2	1	D47	6800/80W
HOOP-100W-PRO-DM	59.8"(1520mm)	4.8" (120mm)	2	1	D59	8500/100W
HOOP-120W-PRO-DM	79.5"(2020mm)	4.8" (120mm)	3	3	D79	10200/120W
HOOP-160W-PRO-DM	95.3"(2420mm)	4.8" (120mm)	4	4	D98	13600/160W
HOOP-200W-PRO-DM	118.9"(3020mm)	4.8" (120mm)	5	5	D118	17000/200W
HOOP-300W-PRO-DM	166.1"(4220mm)	4.8" (120mm)	6	6	D158	25500/300W
HOOP-400W-PRO-DM	197.6"(5020mm)	4.8" (120mm)	12	6	D197	34000/400W

Ordering Format

Model No.	Installation		Acoustic Configuration	Power		Grade	CRI	CCT		Control		Body Color		Acoustic Color	Dimension code
HOOP	**S**	Suspended	**Blank:** No acoustic	**40W**	For size D24.4"	**Pro-DM**	**80+**	**30K**	3000K	**STD**	Non-dimming	**SW**	Matt white	**Acoustic Color Code**	**D24**
			AC: Acoustic with light	**50W**	For size D36.2"		**90+**	**35K**	3500K	**DIM**	0-10V dimming	**SB**	Matt black		**D36**
				80W	For size D48.0"			**40K**	4000K			**SV**	Silver		**D48**
				100W	For size D59.8"							**RAL**	Customized color		**D59**
				120W	For D79.5"										**D79**
				160W	For D95.3"										**D95**
				200W	For D118.9"										**D119**
				300W	For D166.1"										**D166**
				400W	For D197.6"										**D198**

PRODUCT SPECIFICATION

Acoustic Color Code

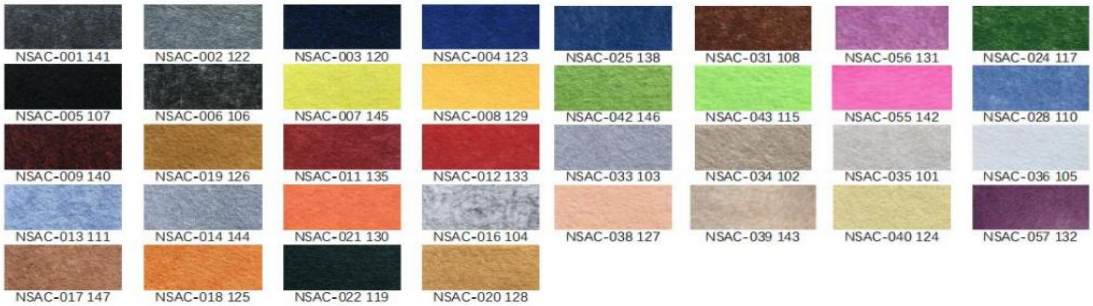

Order Example: HOOP-S-AC-40W-PRO-DM-80-30K-DIM--SW-NSAC-001 141-D24

Light distribution

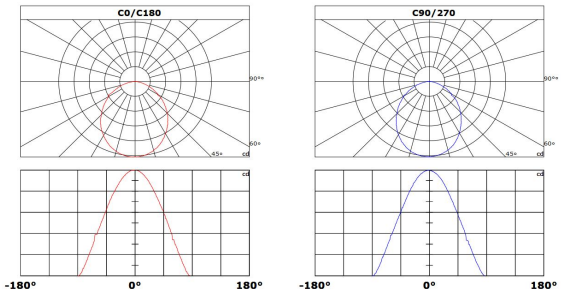

Optical system

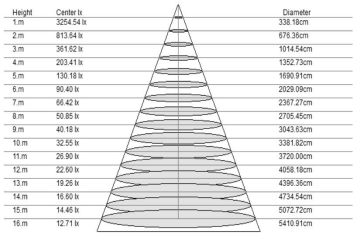

Height	Center lx	Diameter
1.m	3254.54 lx	338.18cm
2.m	813.64 lx	676.36cm
3.m	361.62 lx	1014.54cm
4.m	203.41 lx	1352.73cm
5.m	130.18 lx	1690.91cm
6.m	90.40 lx	2029.09cm
7.m	66.42 lx	2367.27cm
8.m	50.85 lx	2705.45cm
9.m	40.18 lx	3043.63cm
10.m	32.55 lx	3381.82cm
11.m	26.90 lx	3720.00cm
12.m	22.60 lx	4058.18cm
13.m	19.25 lx	4396.36cm
14.m	16.60 lx	4734.54cm
15.m	14.46 lx	5072.72cm
16.m	12.71 lx	5410.91cm

Beam Angle:118.80°(50%Imax)

Accessories

A.Mounting Bracket
B.Anchor Screws
C.Plastic Anchors
D.Bracket Screws
E.Canopy Screws
F.Wire Connectors

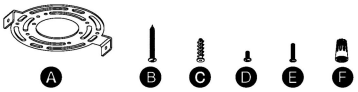

Material

LED Driver	ARCATA or Equivalent, AC120-277V, PF>0.9, no flicker, UL Cert, Class P
Alu PCB	2.0W.M/K, UL Cert
Housing	Alumium6063, painting.
Lens	PC, UL-94VO, Anti-UV

LED system

LED	Samsung 2835, 3V, 150mA
CCT	2700K, 3000K, 3500K, 4000K and 5000K with a great color consistency (within 6–step MacAdam ellipse)
Led life	Minimum 50,000h with 70% of lumen maintenance in 25C ambient temperature, in compliance with IES LM-80 testing measurements.
Operation temp	minus 20C to 40C (centigrade)