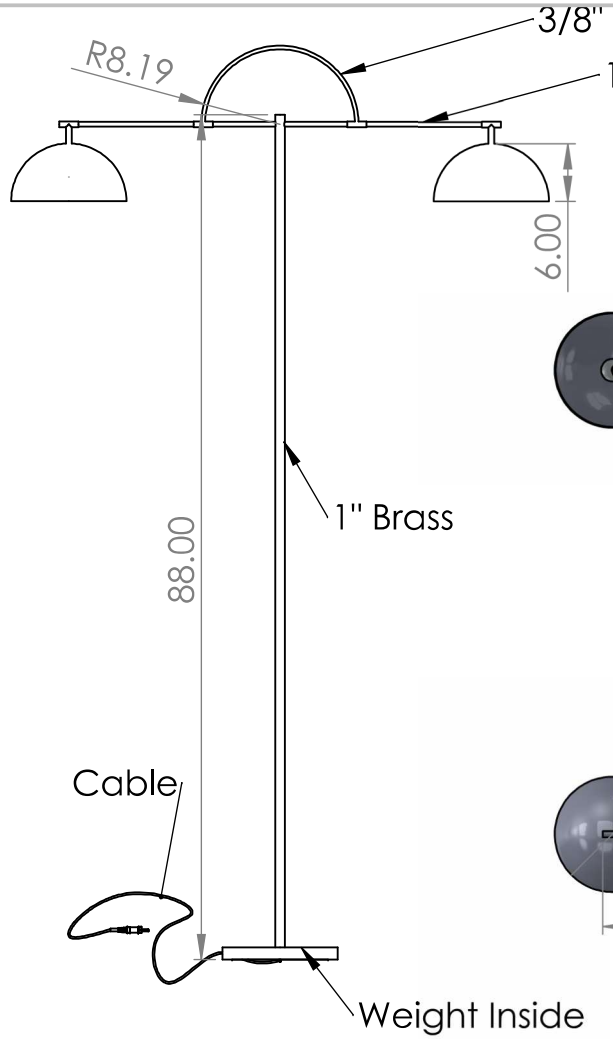

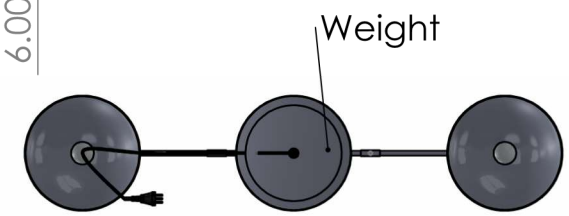

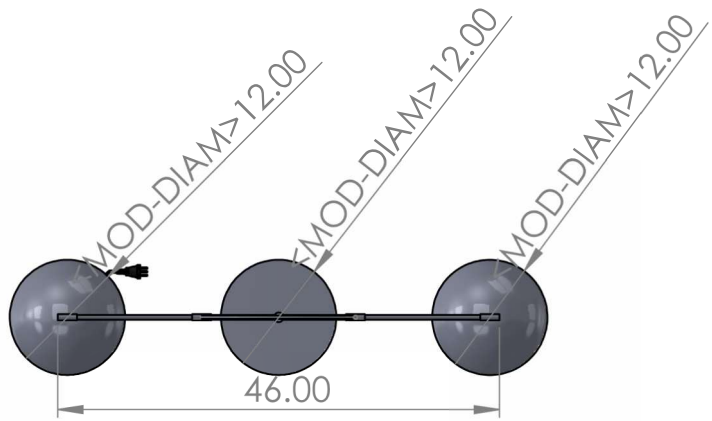

Notes:	Finish Notes:	Lighting Components
Material: Brass	Housing: Raw Brass	Lumens: N/A
LED: N/A	Diffuser: N/A	Color Temp.: N/A
Setting: UL Dry Location		Dimmable: N/A
Mount: Floor Lamp		Watts: Up to 60W
		Type: Md. Base - E26
	DO NOT SCALE DRAWING	

CIP LIGHTING

(803) 766-0243 |
info@ciplighting.com

SIZE	DWG. NO.	REV
A	SP-40-2	
SCALE: 1:20	WEIGHT:	SHEET 1 OF 1